CNC Procedure 2015_003

May 12th

2015

Spindle Analog Output voltage for driving 3rd party spindle drive or invertor trouble shooting method

[3rd Party Spindle Analog Output Description and troubleshooting]

Description:

Spindle Analog voltage control performed by a CNC. An analog voltage (a speed instruction) for analog spindle control is applied to an amplifier of a motor (for example, spindle motor) from CNC and the motor is rotated at the speed in proportion to the applied analog voltage.

Specifically, the CNC normally outputs an analog voltage from −10 V to +10V to an analog amplifier as speed instruction for analog spindle control. The analog amplifier amplifies electric power supplied via an electromagnetic switch from a three phase AC power source for motor driving in proportion to the analog voltage of the speed instruction, and supplies current to a motor via a power line. Thereby, the motor is rotated at a rotation speed corresponding to the speed instruction (analog voltage). At this time, the rotation speed of the motor is detected by a external position coder, and the detected speed signal is fed back to the CNC. The CNC controls analog voltage output so as to make the detected speed the same as the instruction speed.

A CPU (processing unit) obtains the speed instruction for performing analog spindle control, and determines an analog voltage output value corresponding to the obtained speed instruction, and writes a digital value corresponding to the determined output value into a D/A (digital/analog) converter. The D/A converter convert the written digital value to an analog value and outputs the converted analog value. An amplifier amplifies the outputted analog voltage. Then, the amplifier outputs the amplified analog voltage to the analog amplifier as a speed instruction

Thus, in the analog spindle control of the CNC, the speed of the motor can be instructed by an analog voltage. However, an analog voltage generated in practice, necessarily includes an error with respect to the speed instructed by the CNC and an error is also generated on the side of the analog amplifier receiving the instruction. As a result, the speed of the motor is not completely coincident with the instruction speed. This becomes a problem in particular when a speed ““0” ” is instructed. That is, there arises a problem that in spite of the fact that a speed **“0”** is instructed, the motor rotates at a low speed (at a speed not equal to “0”) due to the error of the analog voltage.

In order to avoid such phenomenon, an enable signal which indicates the validity or invalidity of the speed instruction signal is sent out from the CNC to the analog amplifier at the same time with and in addition to the above described speed instruction. That is, when the CNC performs control to instruct the speed **“0”,** it stops sending out the enable signal and invalidates the instructed analog voltage. On the other hand, when the CNC instructs the speed other than “0”, it performs control to send out the enable signal and to validate the analog signal.

The analog amplifier judges the speed instruction as valid while receiving the enable signal. If the sending out of the enable signal is stopped, the analog amplifier performs control so as to make the speed of the motor become “0”. Alternatively, the current output to the motor via the power line is stopped.

The CPU outputs a speed instruction (digital value) to the D/A converter when the speed instruction value is a value other than “0”. At the same time, the CPU performs writing for sending out an enable signal, into a driver which outputs the enable signal. On the other hand, when the speed instruction value is “0”, the CPU performs writing for stopping sending out the enable signal, into the driver.

Fanuc Spindle Analog:

Spindle Analog output controls external spindle interface control

The Spindle Analog output can control upto 1 Analog Spindle

The relationship between Spindle Analog output and function is described as below:

Function \ Spindle	Analog spindle First spindle
Threading/feed per revolution (synchronous feed)	Available
Constant surface speed control	Available
Spindle speed fluctuation detection (T series)	Available
Actual spindle speed output (T series)	Available
Spindle positioning (T series)	Available
Cs contour control	Unavailable
Multi-spindle control	Unavailable
Rigid tapping	Available
Spindle synchronous control	Unavailable
Simple spindle synchronous control (M series)	Unavailable
Spindle control unit functions, such as spindle orientation, spindle output switching, and spindle switching (*1)	Available
Polygon machining (T series) (using the servo motor axis and spindle)	Available
Polygon machining with two spindles (T series) (Spindle and spindle polygon)	Unavailable
Spindle output control by the PMC	Available

What are the possiable way to interface Fanuc and 3rd party Spindle Drive to CNC?

- Possible Spindle Analog is highlighted for reference in the beloe picture:

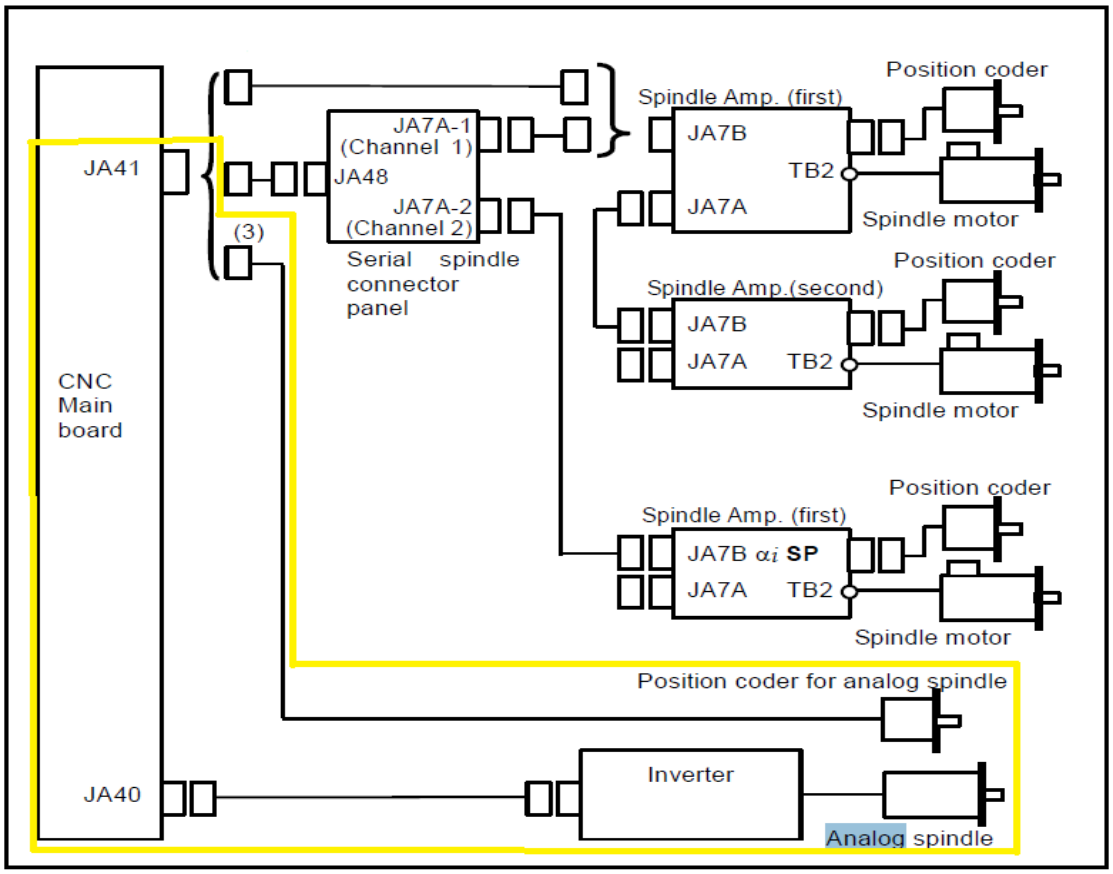

Note:

When using the serial spindle interface, the postion coder interface for analog spindle cannot be used.

Where is spindle analog voltage command interface in CNC?

- JA40 – Spindle Analog Voltage command output
- JA41 – Spindle External Position Coder signal input to CNC (Can be used only in case of Analog spindle option only).
- Connector location highlight in the below sketch:

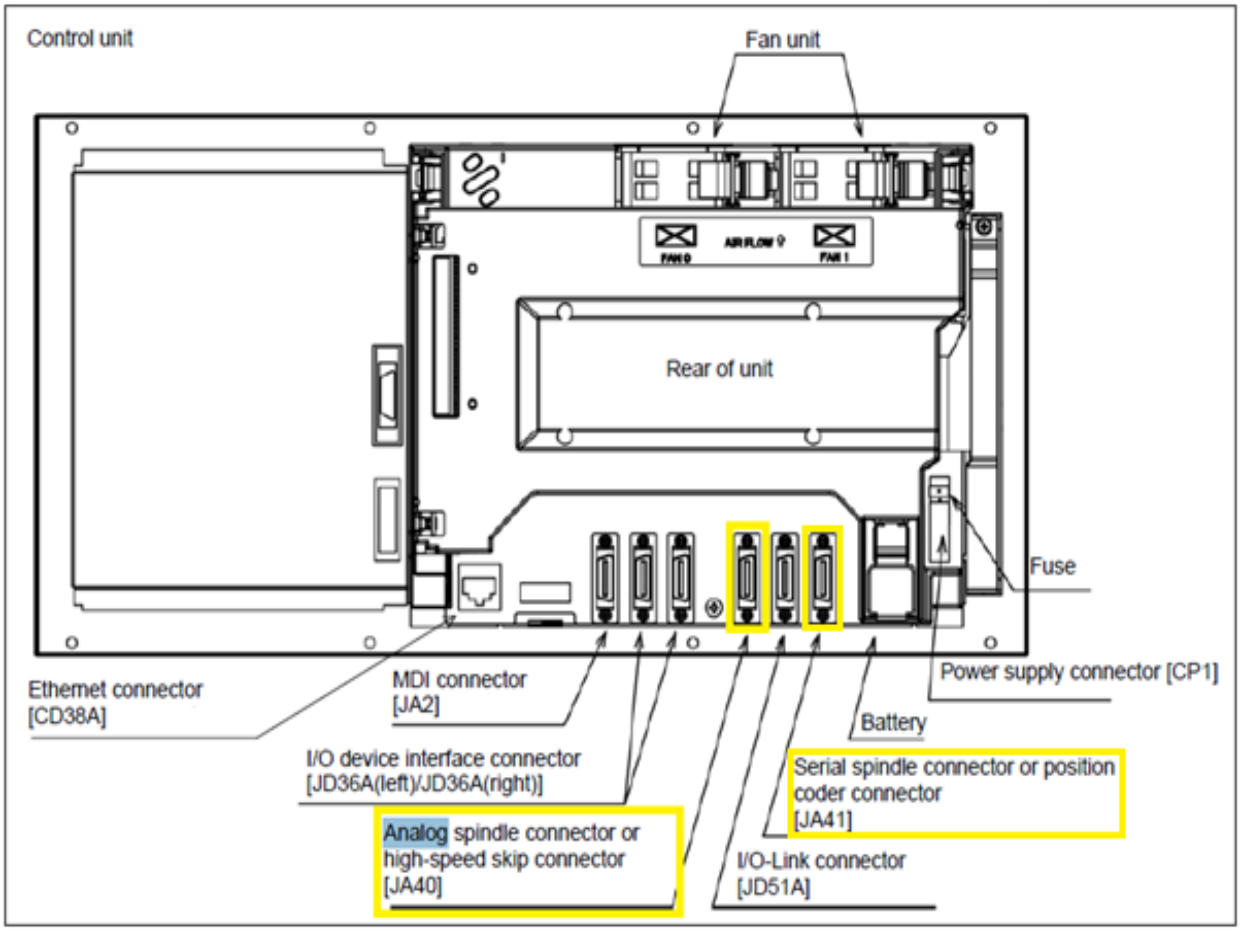

- Connection line diagram to CNC

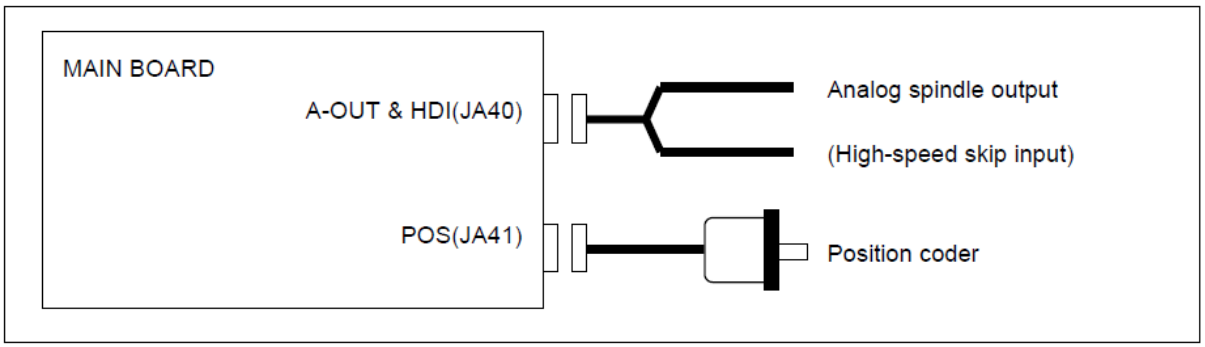

- Check as per the wiring diagram for Spindle Analog Voltage command as below

JA40
FI80-20P,DF1R020WB1
(PCR-EV20MDT)

1	( )	11	( )
2		12	
3	( )	13	( )
4		14	
5	ES	15	( )
6	( )	16	
7	SVC	17	( )
8	ENB1	18	
9	ENB2	19	( )
10		20	

Signal Name	Description
SVC, ES	Spindle command voltage and common line
ENB1, ENB2	Spindle enable signal (Note1)

RECOMMENDED CABLE SPECIFICATION:
A66L-0001-0284#10P (#28AWG× 10 pairs)
RECOMMENDED CABLE-SIDE CONNECTOR:
PCR-E20FA (Honda Tsushin Kogyo)
FI30-20S (Hirose Electric)
FCN-247J020-G/E (FUJITSU COMPONENT)
52622-2011 (Molex Japan)

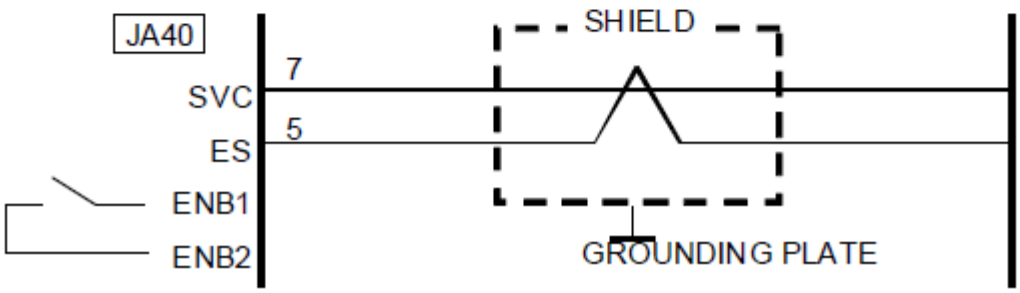

NOTE

1 ENB1 and ENB2 are turned on when the spindle voltage command is valid. These signals are used when other than the FANUC analog spindle servo unit is used.
2 The rating of analog output is shown below.
Output voltage: ±10 V
Output current: 2 mA (Max.)
Output impedance: 100 Ω
3 The signals enclosed by parentheses ( ) are used for high-speed skip (HDI).
4 The upper connector specification of JA40 is for the LCD-mounted type.
The lower connector name in parentheses is for the stand-alone type.

- Check as per the the wiring diagram for Spindle External Position Coder as below incase of Spindle Analog Voltage command used:

JA41 (main board)

FI80-20P, DF1R020WB1 (PCR-EV20MDT)

1	( )	11	( )
2	( )	12	0V
3	( )	13	( )
4	( )	14	0V
5	PA	15	SC
6	*PA	16	0V
7	PB	17	*SC
8	*PB	18	+5V
9	+5V	19	( )
10	( )	20	+5V

Signal name	Description
SC,*SC	Position coder C phase signal
PA,*PA	Position coder A phase signal
PB,*PB	Position coder B phase signal

Recommended cable connector:
PCR-E20FA (manufactured by Honda Tsushin Kogyo)
FCN-247J020-G/E (manufactured by Fujitsu)
52622-2011 (manufactured by Molex Japan)

Recommended cable specification:
A66L–0001–0286
(#20AWG x 6 + #24AWG x 3), max. length 20 m

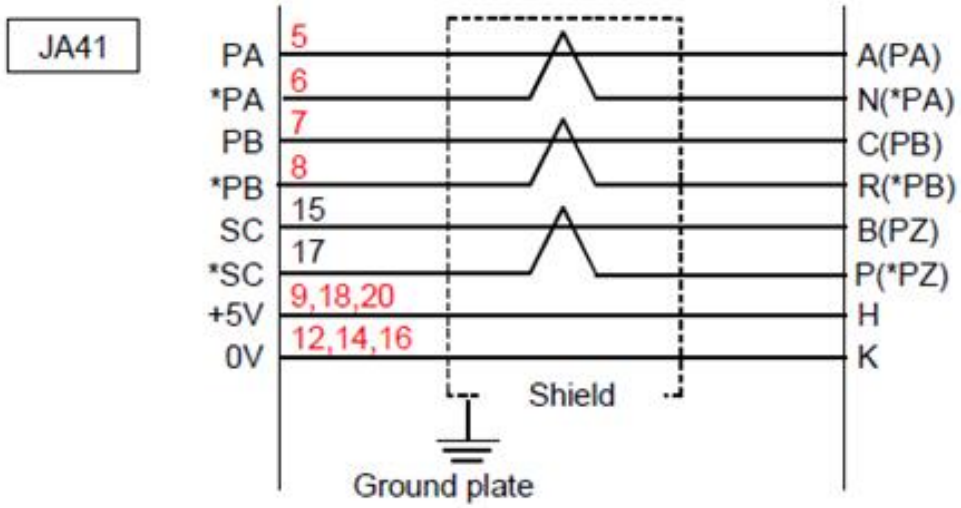

Note:

- 20 Pin PCR Connector Configuration is as below for reference – JA40 ~ 41:

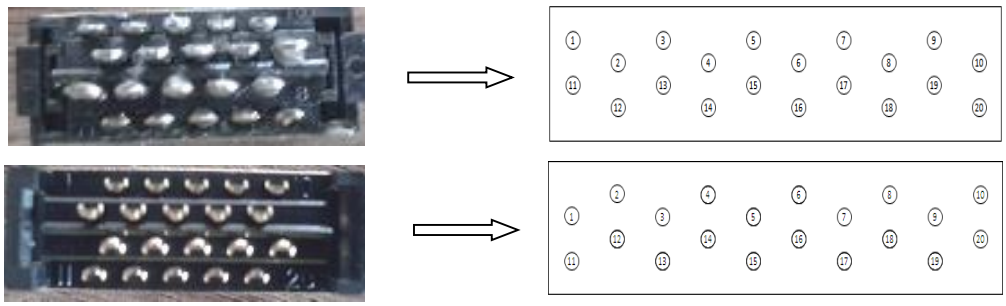

➢ Parameters reference related to Spindle Analog Voltage:

	#7	#6	#5	#4	#3	#2	#1	#0
3716								A/Ss

[Input type] Parameter input
[Data type] Bit spindle

NOTE
When this parameter is set, the power must be turned off before operation is continued.

#0 A/Ss Spindle motor type is :
0: Analog spindle.
1: Serial spindle.

NOTE
1 To use a serial spindle, set bit 5 (SSN) of parameter No. 8133 to 0.
2 A maximum of one analog spindle can be controlled.
3 When using an analog spindle, set it at the end of the spindle configuration.

3717	Spindle amplifier number to each spindle

NOTE
When this parameter is set, the power must be turned off before operation is continued.

[Input type] Parameter input
[Data type] Byte spindle
[Valid data range] 0 to Maximum number of controlled spindles
Set a spindle amplifier number to be assigned to each spindle.
0: No spindle amplifier is connected.
1: Spindle motor connected to amplifier number 1 is used.
2: Spindle motor connected to amplifier number 2 is used.
3: Spindle motor connected to amplifier number 3 is used.

3718	Subscript for display of a serial spindle or analog spindle

[Input type] Parameter input
[Data type] Byte spindle
[Valid data range] 0 to 122
Set a subscript to be added to spindle speed display on a screen such as the position display screen.

3730	Data used for adjusting the gain of the analog output of spindle speed

[Input type] Parameter input

[Data type] Word spindle
[Unit of data] 0.1%
[Valid data range] 700 to 1250
Set data used for adjusting the gain of the analog output of spindle speed.
[Adjustment method] <1> Assign standard value 1000 to the parameter.
<2> Specify the spindle speed so that the analog output of the spindle speed is the maximum voltage (10 V).
<3> Measure the output voltage.
<4> Assign the value obtained by the following equation to parameter No.3730.
Setting value = (10 (V) / Measured data (V)) × 1000
<5> After setting the parameter, specify the spindle speed so that the analog output of the spindle speed is the maximum voltage. Confirm that the output voltage is 10V.

3731	Compensation value for the offset voltage of spindle speed analog output

[Input type] Parameter input
[Data type] Word spindle
[Unit of data] Velo
[Valid data range] -1024 to 1024
Set a compensation value for the offset voltage of spindle speed analog output.
Setting = -8191 × offset voltage (V)/12.5

[Adjustment method]
<1> Assign standard value 0 to the parameter.
<2> Specify the spindle speed so that the analog output of the spindle speed is 0.
<3> Measure the output voltage.
<4> Assign the value obtained by the following equation to parameter No.3731.
Setting value = (-8191 × Offset voltage (V)) / 12.5
<5> After setting the parameter, specify the spindle speed so that the analog output of the spindle speed is 0. Confirm that the output voltage is 0V.

	#7	#6	#5	#4	#3	#2	#1	#0
8133			SSN			SCS		

[Input type] Parameter input
[Data type] Bit

#2 SCS Cs contour control is:
0: Not Used.
1: Used.

NOTE
When at least one of these parameters is set, the power must be turned off before operation is continued.

#5 SSN Spindle serial output is:
0: Used.
1: Not Used.

- NC Parameter Settings recommended for Spindle Analog Voltage Output:

3701 # 1 (ISI) = 1	To use the serial interface (Set 0)
3716 # 0 (A/s) = 0	Selection of spindle (analog/serial) set 1
3717 = 1 (Spindle Index Number)	Amplifier no of each spindle
3730 = 1000 (Analog spindle Gain)	Analog spindle Gain
3731 = -8191xOffset Voltage(V)/12.5	Analog out offset Gain
8133 # 5 (SSN) = 1	Spindle Serial output used or not

- DGN Information to be check for Spindle Analog output:

	#7	#6	#5	#4	#3	#2	#1	#0
400				SAI	SS2	SSR	POS	SIC

POS 0: No module is present for spindle analog output.
1: A module for spindle analog output is present.

SSR 0: Spindle serial output is not used.
1: Spindle serial output is used.

SAI 0: Spindle analog output is not used.
1: Spindle analog output is used.

- PMC Signal to be check for Analog spindle:

Spindle stop signal	*SSTP	G029.6
Spindle orientation signal	SOR	G029.5
Spindle speed override signals	SOV0~SOV7	G030
Spindle speed arrival signal	SAR	G029.4
Spindle enable signal	ENB	F001.4
Gear selection signals (output)	GR1O,GR2O, GR3O	F034.0~F034.2
Gear selection signals (input)	GR1	G028.1
	GR2	G028.2
Spindle fluctuation detection alarm signal	SPAL	F035.0

Spindle enable signal (ENB)

Another output related to spindle control is the spindle enable signal ENB.
The ENB signal is logical 1 when a nonzero command output is sent to the spindle. If the command is logical 0, the ENB signal becomes logical 0.
When the analog spindle is being used, an offset voltage in the spindle motor speed amplifier may cause the spindle motor to rotate at low speed even if the command output (in this case, analog voltage) to the spindle is zero. The ENB signal can be used to stop the motor in such a case.

Electrical specification of analog spindle interface

The ENB1/2 signal on the analog spindle interface is an interface signal that is turned on and off under the same conditions as of the spindle enable signal <Fn001.4>, and it can be used even when a serial spindle is used.

Spindle stop signal *SSTP<Gn029.6>

[Classification] Input signal
[Function] The command output to the spindle is disabled.
[Operation] When the spindle stop signal turns to "0" , the output voltage becomes 0V and the enable signal ENB turns to "0" (M05 is not output).
When this signal turns to "1", the analog voltage returns to its original value and the ENB signal turns to "1".

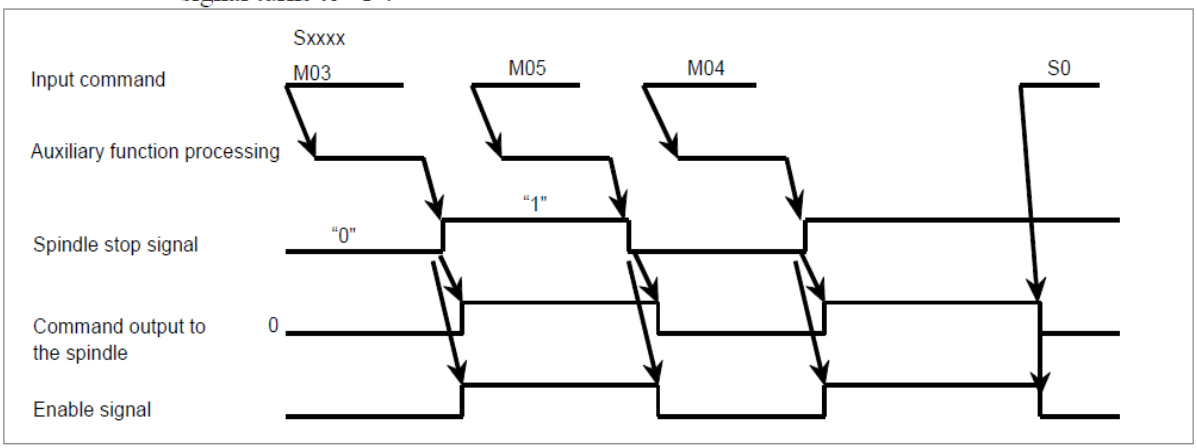

The above time chart is an example. Actually, the time chart should meet the specification of the spindle control unit.

- When this signal is not used, always set the signal to "1".
- When the M03, M04, or M05 command is issued, the CNC outputs the code signal and strobe signal only.

Spindle speed override signals SOV0 to SOV7<Gn030>

[Classification] Input signal

[Function] The spindle speed override signal specifies an override from 0% to 254% in 1% units for the S command sent to the CNC.

[Operation] An override value in binary must be set in 8 bits from SOV7 to SOV0.
The spindle speed override function is disabled (an override of 100% is applied) under the following conditions:

- Tapping cycle (M series : G84, G74 T series : G84, G88)
- Thread cutting (M series : G33 T series : G32, G92, G76)

→ When this function is not in use, specify an override of 100%; otherwise, an override of 0% becomes effective, thus disabling the spindle from rotating.

Auxiliary function lock signal AFL <G005#6>

[Classification] Input signal

[Function] This signal selects auxiliary function lock. That is, this signal disables the execution of specified M, S, T, and B functions.

[Operation] When this signal turns to "1", the control unit functions as described below.

(1) The control unit does not execute M, S, T, and B functions specified for memory operation, DNC operation, or MDI operation. That is, the control unit stops the output of code signals and strobe signals (MF, SF, TF, BF).

(2) If this signal turns to "1" after code signal output, the output operation is executed in the ordinary manner until its completion (that is, until the FIN signal is received, and the strobe signal turns to "0").

(3) Among the miscellaneous functions, M00, M01, M02, and M30 are executed even when this signal is "1". All code signals, strobe signals, decode signals are output in the ordinary manner.

(4) Among the miscellaneous functions, even when this signal is "1", those functions (M98 and M99) that are executed in the control unit without outputting their execution results are executed in the ordinary manner.

WARNING
Even when this signal is "1", spindle analog output or spindle serial output is executed.

Possible Troubles:

- Analog spindle was not rotating after M03 or M04 command
- Analog spindle speed fluctuating in M03 or M04 or S0
- Analog spindle not stop after M05 command
- Analog spindle alarm (D/A Convertor)

Responsible Hardware:

- Analog Module on CNC or MPCB as per system specification with Analog output option
- External position coder connected to spindle head
- Interfacing cables between CNC to Spindle Drive and Position Coder
- 3rd Analog Spindle drive
- 3rd Spindle Motor
- PMC I/O's to monitor the external spindle input/output status

- AL -1241 D/A converter error:

  This alarm occurs due to trouble in D/A conversion circuit

  The Spindle Analog voltage output command, Spindle Load meter output and Enable signal to Analog spindle drive will be disabled immediately.

  Check for the DGN 400 to know the status of the Spindle Analog Module on the CNC.

  Check for the noise influence on the Spindle Analog voltage connected to Analog Spindle amplifier.

  Replace the Analog module on the CNC or MPCB, if still problem persist.

- Analog spindle not stop after M05 command:

  When the command is given to stop, the spindle amplifier applies a braking signal to the motor until it senses zero speed. If a Spindle motor coasts to a stop rather than braking, check for loose belts or some other reason that would cause the pulley to slip. The reason for this is that the spindle stopping is a one shot deal. If the belt can slip, the motor will not stop and the braking signal will be removed. Once the motor is no longer in a braking condition, it is put in motion again by the momentum of the spindle.

  Some machines use a external Position Coder driven by a belt on the Spindle. Check CNC Parameter PRM 3701#1, 3716#0 & 8133#5 to enable the Position coder. If the Position coder is turned off or is faulty, many of the spindle functions will not operate such as Constant Surface Speed, Rigid Tapping, etc. Another symptom of this condition is that the axes will not move when commanded to in G99 mode (Feed per Rev). Also, with most machines using the position coder, its output supplies the signal for the Actual Spindle Speed in the Program Check Screen. In this case the speed usually can still be viewed on the Operating Monitor Screen.

Most cases Spindle speed is monitored by a proximity detector or position coders for position and velocity feedback. The position coder feedback normally connects directly to the CNC on JA41. Normally, the connector for this connection consists of 6 conductors. They are Red, White, Yellow, Black, Blue, and Green. If this detector fails, the motor will usually respond to a speed command by trying to run slowly, sometimes in the wrong direction, while making a screeching noise. When commanded to stop, it may run very fast in the opposite direction and then either stop or go into an Alarm condition. In this condition please check the position coder feedback using oscilloscope with below reference waveform:

Test point	Normal wave form
PA–0V	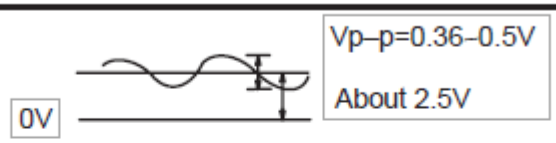
PB–0V	Same as above
RA–0V	Same as above DC2.5V±0.2V
RB–0V	Same as above
PAA/SC–0V PBA/*SC–0V (CW rotation)	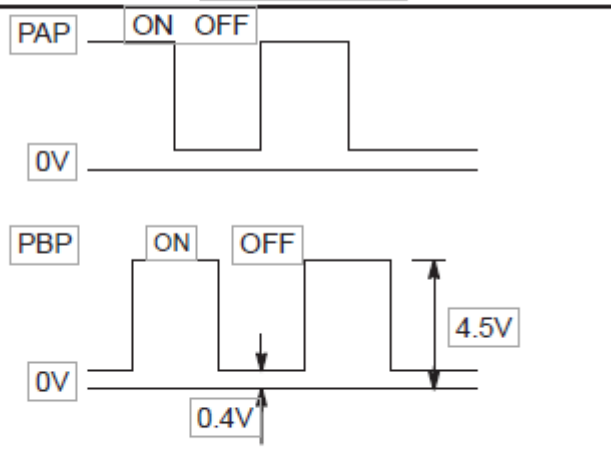 Check that the ON/OFF duty cycle is 50%. (The PAP and PBP signals are inverted in CCW direction.)

- **Analog spindle was not rotating after M03 or M04 command:**

When troubleshooting spindle not rotating problems is to be sure that the amplifier is receiving a run command and speed command. You can always check diagnostic signals DGN 400 to determine if the spindle is being commanded to run. Please check this analog voltage at JA40 connector Pin No. 7(SVC) & 5(ES) also enable signal at Pin 8(ENB1) & 9(ENB2).
Generally speaking, if there is something wrong with a Fanuc module, it will give some sort of alarm. Also, if a run command is received at the amplifier, the amplifier will give some indication of it. But in case of 3rd party spindle drive the indication may differ for visual check and may need to seek external guidance.

Normally when there is a problem with the ATC or pallet changer, etc the amplifiers will be in a ready state but will seem to ignore a spindle command. Another thing that makes it so tough is that even though these kinds of problems will not let the spindle run, most other functions are normal such as axis movement, etc. The one thing that may be inhibited sometimes along with the spindle is Z axis movement, especially in the case of an ATC problem. In this instance please check PMC signal G29.6 and G5.6 to confirm the spindle safe to operate signals.

On an Analog Spindle Drive you can check the Analog command signal and Enable Input at test points as per the 3rd Party Analog Spindle drive manual information. This will ensure the connecting cables are intact.

If still problem persists request customer to check for the condition of 3rd party Analog Spindle drive.

- **Analog spindle speed fluctuating in M03 or M04 or S0:**

If a spindle motor exhibits noise or roughness at a certain RPM, you can try to determine if the cause is electronic or mechanical by turn of the main incoming breaker to the machine while the spindle is running.

This will cause it to free run to a stop – Electrical Hardware

This will cause it to brake to a stop – Mechanical Elements

With these phenomena the problem is due to mechanical friction or electrical hardware can be easy fixed.

Check for loose or damaged belts or some other reason that would cause the pulley to slip due to damaged key, etc. This cause the position coder signal to vary abruptly in-turn the command voltage varies.

You can check the below factors for stability, if not stable necessary action to be taken.

- Spindle motor feedback at JA41 connector as per spindle position coder waveform.
- Spindle Analog command status at JA40

If still problem persists request customer to check for the condition of 3rd party Analog Spindle drive or motor.